BRTM VR

Data sheet - rev. 1.0

Rod Ends - Premium Line

Rod ends with roller bearing, full comlement design, male thread, series K, DIN ISO 12240-4, low maintenance, lubrication possible

FEATURES AND ADVANTAGES

- **HOUSING**: 17Cr3 forged steel, case hardened bearing race, superfinished, surface galvanized, free of Cr VI
- **INNER RING**: 100Cr6 ball bearing steel, hardened, superfinished
- **ROLLING ELEMENT**: 100Cr6 ball bearing steel, hardened, superfinished
- **MAINTENANCE**: low maintenance, lubrication possible, aluminium-complex-soap-grease, approval according to USDA H1
- **GREASE NIPPLE IN STAINLESS STEEL**: DIN 3405 D1/A (until size 10) / DIN 71 412 H1 (from size 12), further grease nipples
- **TEMPERATURE RANGE**: -45°C to +120°C
- **USE & MAINTENANCE :** see this page
- **STATIC LOAD SERVICE LIFE :** see this page
- **TOLERANCES :** see this page

SCAN ME!

myRollon

COMPONENTS AND DIMENSIONS

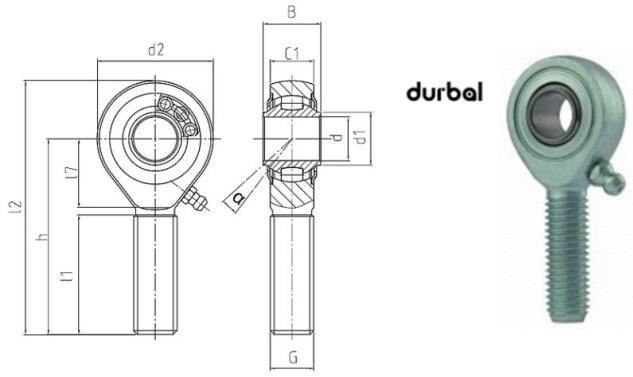

Type		Measurements [mm]															Tilt angle	Rotational speed limit	Axial factor		Basic load rating		Radial clearance	Weight
Right hand thread	Left hand thread	d	G	B	C1	h/h1	d1	d2	d3	d4	dk	l1/l3	l2/l4	l5	l7	W	α (°)	n_{max} (min^{-1})	Y	Y0	dyn C (kN)	stat C0 (kN)	CN (µm)	kg
BRTM 10 - 30 - 501	**BRTM 10 - 30 - 502**	10	M10	14	10.5	48	12.7	28	-	-	-	29	62	-	15	-	8	820	9.5	5	11.4	6.5	10-30	0.08
BRTM 12 - 30 - 501	**BRTM 12 - 30 - 502**	12	M12	16	12	54	14.6	32	-	-	-	33	70	-	19	-	7.5	750	9.5	5	14.9	9.8	10-30	0.11
BRTM 16 - 30 - 501	**BRTM 16 - 30 - 502**	16	M16	21	15	66	19	42	-	-	-	40	87	-	22	-	7	650	9.5	5	17.3	11.8	10-30	0.21
BRTM 18 - 30 - 501	**BRTM 18 - 30 - 502**	18	M18x1.5	23	16.5	72	21.9	46	-	-	-	44	95	-	25	-	8.5	600	9.5	5	18.5	12.9	10-30	0.28
BRTM 20 - 30 - 501	**BRTM 20 - 30 - 502**	20	M20x1.5	25	18	78	24.3	50	-	-	-	47	103	-	28	-	7	550	9.5	5	20.6	14.4	10-30	0.37
BRTM 22 - 30 - 501	**BRTM 22 - 30 - 502**	22	M22x1.5	28	20	84	25.8	54	-	-	-	51	111	-	26	-	8	480	9.5	5	23.4	17.3	10-30	0.47
BRTM 25 - 30 - 501	**BRTM 25 - 30 - 502**	25	M24x2	31	22	94	30.1	64	-	-	-	57	126	-	30	-	5	400	9.5	5	26.7	20.5	10-30	0.64
BRTM 30 - 30 - 501	**BRTM 30 - 30 - 502**	30	M30x2	37	25	110	34.5	70	-	-	-	66	145	-	35	-	7.5	300	9.5	5	42.2	35.5	10-30	0.93
BRTM 35 - 30 - 501	**BRTM 35 - 30 - 502**	35	M36x2	48	35	137	44.5	92	-	-	-	82	183	-	48	-	7	267	9.5	5	63.2	50.5	10-30	2.05
BRTM 40 - 30 - 501	**BRTM 40 - 30 - 502**	40	M42x2	66	49	170	60	120	-	-	-	94	230	-	70	-	7	240	9.5	5	124	99	10-30	4.4